Scientific Atlanta
A CISCO COMPANY

Optoelectronics

Model GS7000 4-Port Node 1 GHz with 40/52 MHz split

Description

The Model GS7000 4-Port Node is Scientific-Atlanta's latest generation 1 GHz optical node platform and utilizes a completely new housing designed for optimal heat dissipation. This platform allows independent segmentation and redundancy for both the forward and reverse paths in a reliable, cost-effective package.

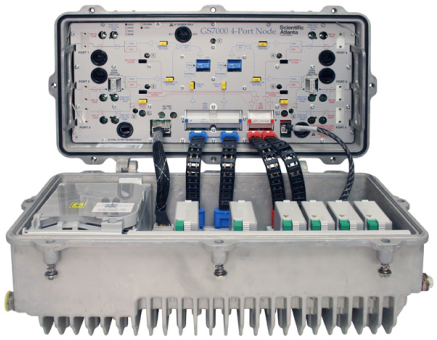

The forward path of the Model GS7000 Node can be deployed with a single broadcast 1310/1550 nm optical receiver distributing common services to either four output ports (all high level) or six output ports (two high level and four lower level). The forward path can also be segmented by using two independent optical receivers that each feed half of the node's output ports (left/right segmentation). Forward path optical redundancy is supported via the use of optional redundant optical receivers. The type of forward path segmentation and/or redundancy is determined by the type of Forward Configuration Module installed in the node.

The Model GS7000 Node's reverse path is equally flexible. Reverse traffic can be segmented or combined and routed to a maximum of 4 FP, DFB, or CWDM reverse optical transmitters, or to advanced Baseband Digital Reverse optical transmitters as part of Scientific-Atlanta's bdr™ system. Reverse path optical redundancy is supported via the use of optional redundant optical transmitters. The type of reverse path segmentation and/or redundancy is determined by the type of Reverse Configuration Module installed in the node. A Reverse Input Port is also provided for high frequency (5 – 210 MHz) reverse signal injection.

All optical transmitters and optical receivers used in the GS7000 have new high profile module covers that include both a self-contained fiber pigtail storage area and an integrated pull ring for easier module installation and removal. Additionally, the GS7000 optical receiver is a new low-current design that dissipates less power and incorporates a two state interstage RF attenuator switch for performance optimization.

Features

- Six port 1 GHz RF platform
- Uses GainMaker type GaAs FET gain stages
- Uses standard GainMaker style accessories (i.e., attenuator pads, equalizers, diplexers and crowbar)
- Field accessible plug-in Forward Interstage Linear Equalizers, Forward / Reverse Configuration Modules, and Signal Directors
- 3-state reverse switch (on/off/-6 dB) allows each reverse input to be isolated for noise and ingress troubleshooting (status monitoring or local control module required)
- Auxiliary reverse injection (5 - 210 MHz) configurable on up to 2 ports
- Positions for up to 4 optical receivers and 4 optical transmitters in housing lid
- Optional low-cost Local Control Module may be installed in conjunction with a Redundant Forward Configuration Module to allow optical path redundancy when no status monitor is required
- Optional Status Monitoring available (TNCS or other compatible element management system required)
- Fiber entry ports on both ends of housing lid
- Fiber management tray and track provides easy access to fiber connections
- Primary and redundant Power Supplies with passive load sharing
- Spring loaded seizure assemblies allow coax connectors to be installed or removed without removing amplifier chassis or spring loaded mechanism from the rear of the housing base
- Dual/Split AC powering

Model GS7000 Node with 40/52 MHz Split

Scientific Atlanta
A CISCO COMPANY

Block Diagram – Non-segmented Node with 8-position Optical Interface Board

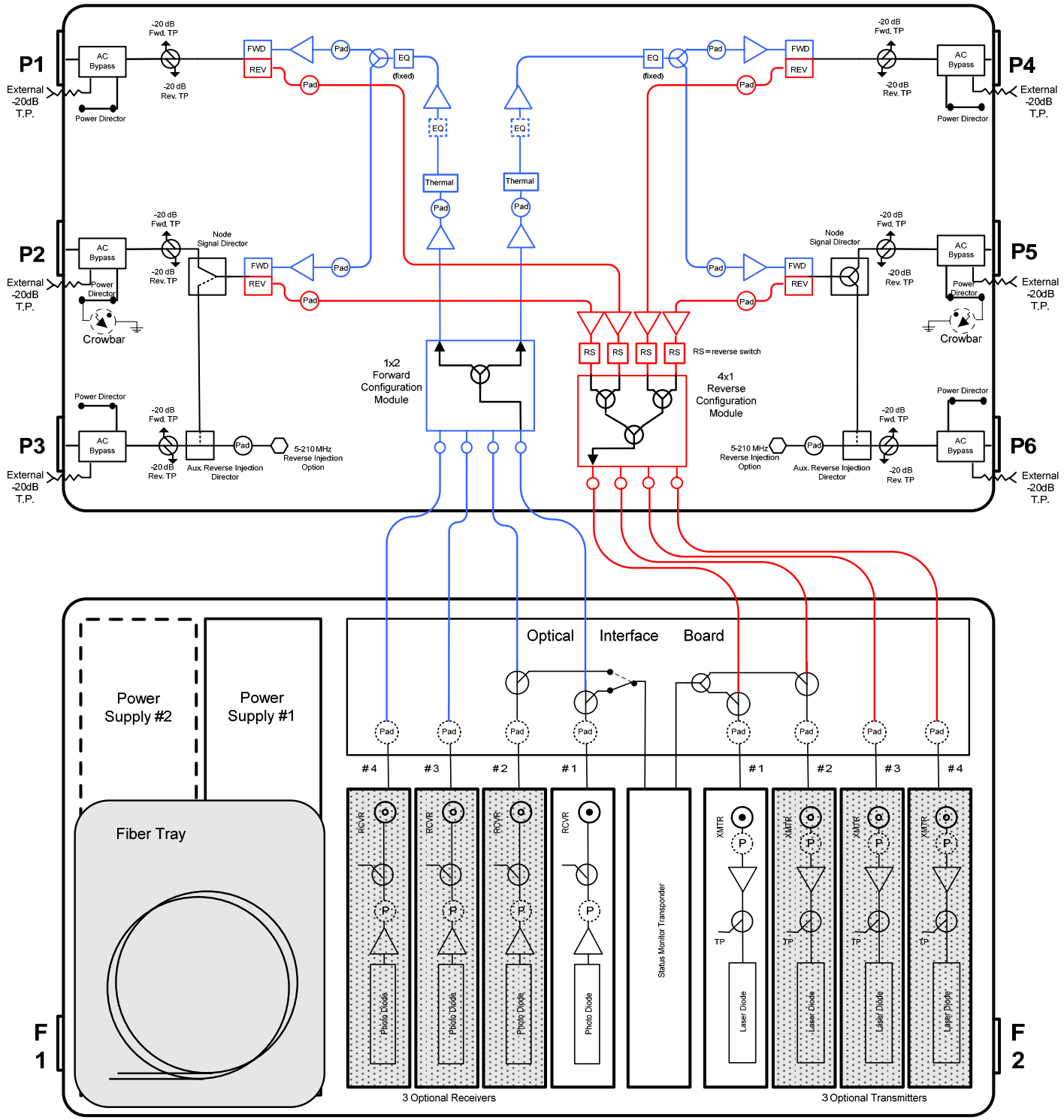

Model GS7000 Node with 40/52 MHz Split

Scientific Atlanta
A CISCO COMPANY

Block Diagram – Segmented Node with 8-position Optical Interface Board

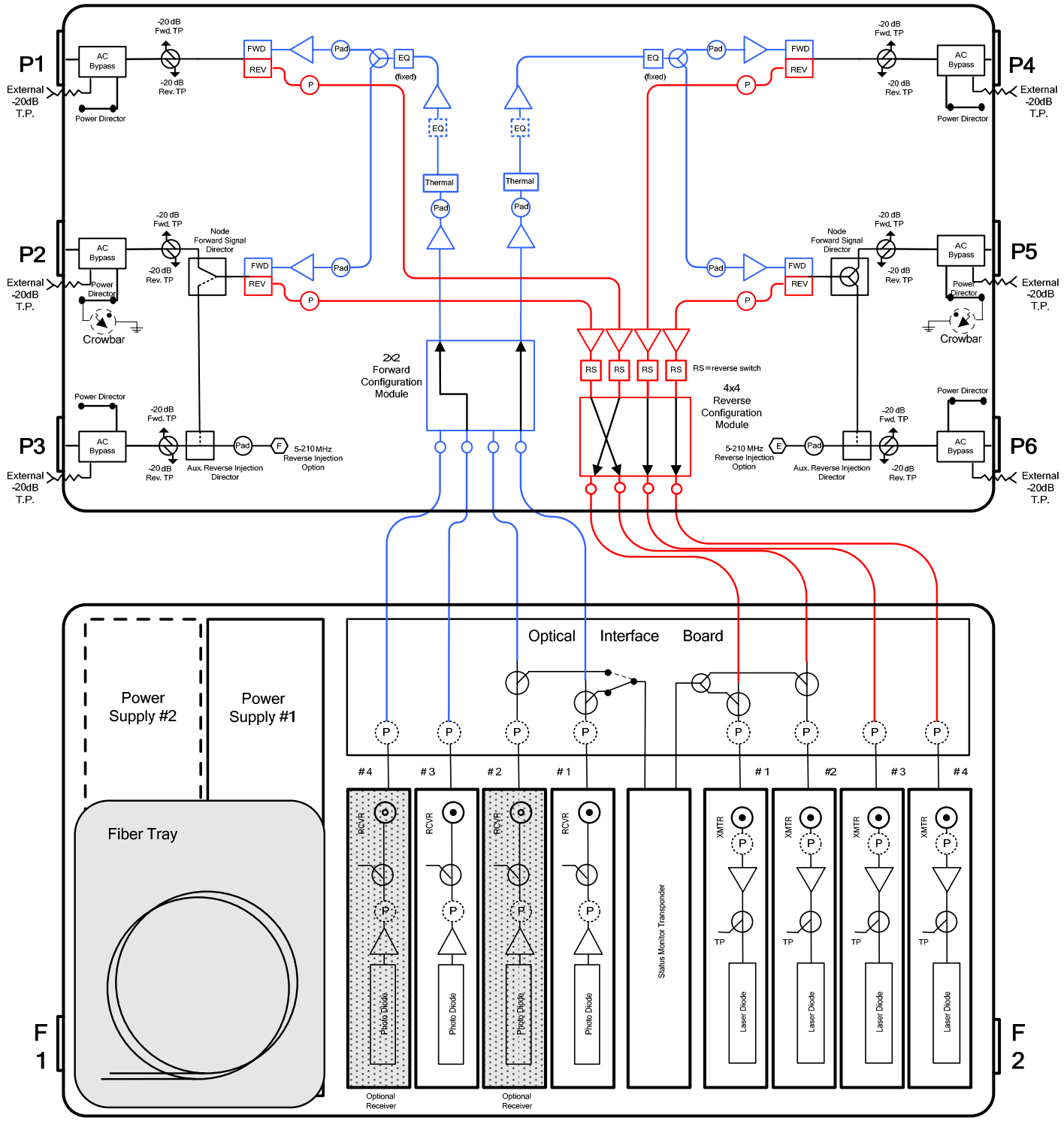

Model GS7000 Node with 40/52 MHz Split

Scientific Atlanta
A CISCO COMPANY

Block Diagram – Node with bdr reverse and 6-position Optical Interface Board

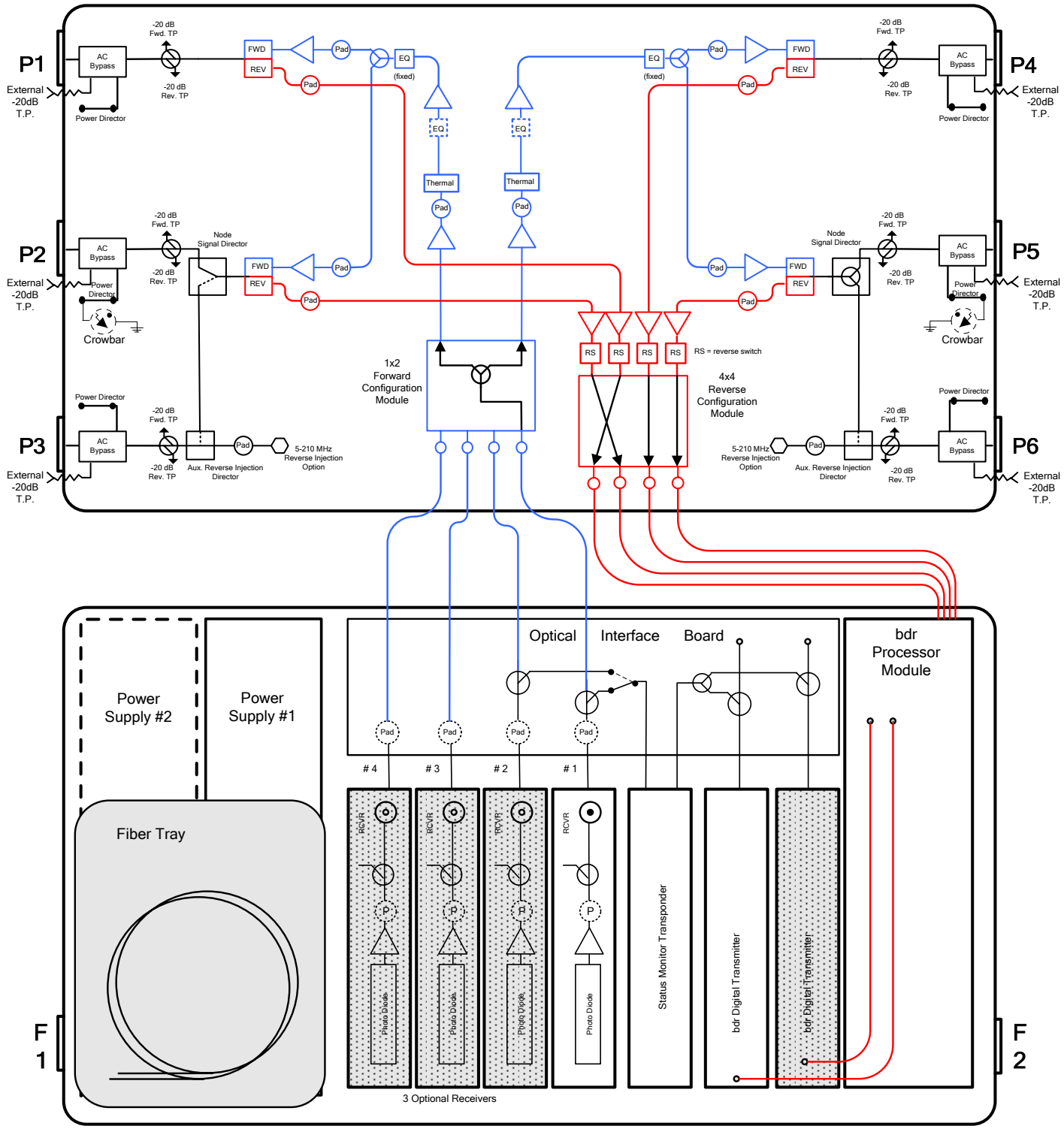

Block Diagrams – Configuration Modules

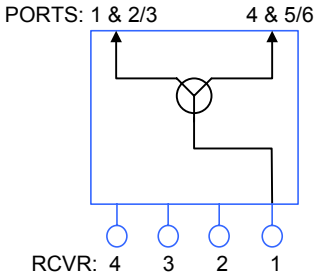

1X2 Forward Configuration Module

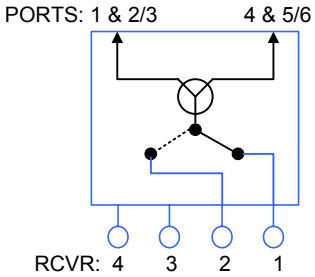

1X2 Redundant Forward Configuration Module

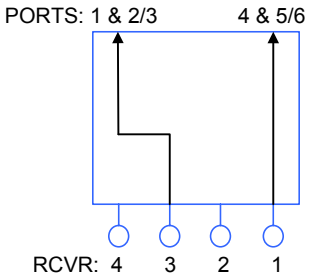

2X2 Forward Configuration Module

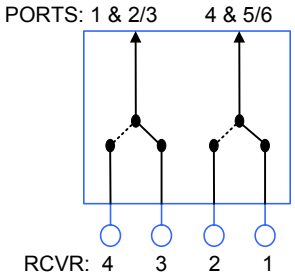

2X2 Redundant Forward Configuration Module

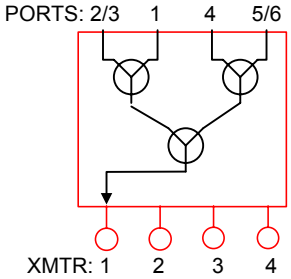

4X1 Reverse Configuration Module

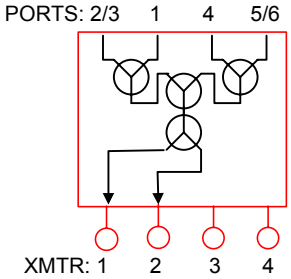

4X1 Redundant Reverse Configuration Module

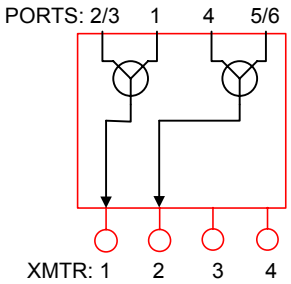

(For 6-port OIB)

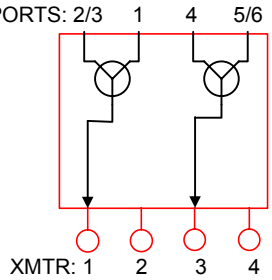

(For 8-port OIB)

4X2 Reverse Configuration Modules

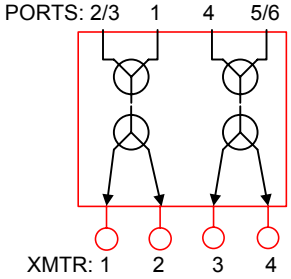

4X2 Redundant Reverse Configuration Module

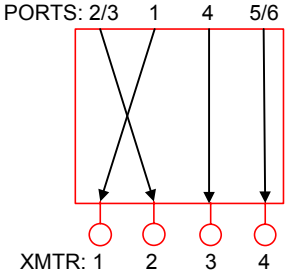

4X4 Reverse Configuration Module

Model GS7000 Node with 40/52 MHz Split

Scientific Atlanta
A CISCO COMPANY

Optical Section Specifications

Optical Section - Forward Receiver Module	Units	GS7000 Low Current RX	Notes
Wavelength	nm	1310 and 1550	
Optical Input Range	mW dBm	0.5 to 2.0 -3 to + 3	1
Pass Band	MHz	52-1002	
Frequency Response	dB	± 0.5	2
Tilt (± 1.0 dB)	dB	0	
Optical Input Test Point (± 10%)	V DC	1V/mW	
Redundant Optical Rx switching threshold (± 1.0 dB)	dBm	-6	
Rx RF Output Level at 0 dBm Optical Rx Power	dBmV	Refer to charts (below)	3
Rx RF Output Test Point (± 1.0 dB)	dB	- 20	

Receiver RF Output Level Vs Transmitter OMI – Rx switch in -5 dB setting

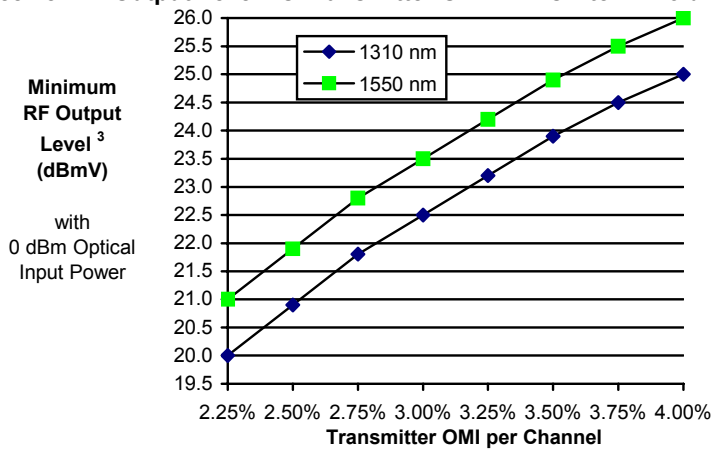

Receiver RF Output Level Vs Transmitter OMI – Rx switch in 0 dB setting

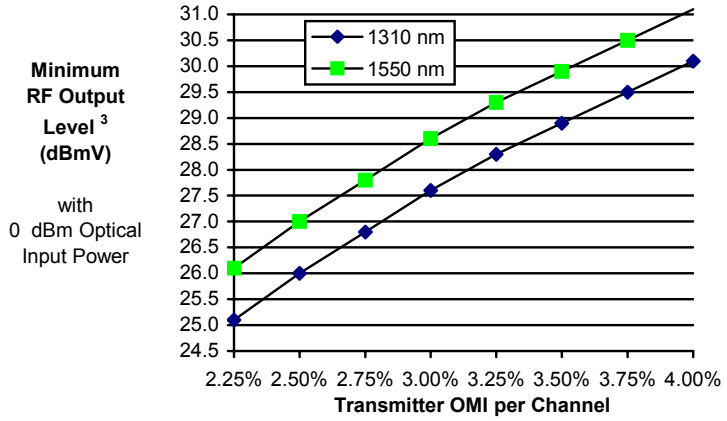

Notes for Optical Section Specifications:

1. Receiver (Rx) has a 2 position RF attenuator switch (-5 dB and 0 dB). The -5 dB setting is used for 0 to + 3 dBm optical Rx power, the 0 dB setting is used for -3 to 0 dBm Rx power.
2. For forward receiver module only. Does not include frequency response contributions from forward optical transmitter.
3. Minimum receiver RF output level for the stated transmitter percent OMI/ch. (Optical Modulation Index per channel), with receiver optical input power of 0 dBm, and specified Rx attenuator setting. To determine RF output levels at other optical input power, add (or subtract) 2 dB in RF level for each 1 dB increase (or decrease) in receiver optical input power.

For reverse optical transmitter and link performance, see the "Analog Reverse Optical Transmitters for Model 6940/6944 and GainMaker Optoelectronic Stations" data sheet.

Unless otherwise noted, specifications reflect typical performance and are referenced to 68°F (20°C). Specifications are based upon measurements made in accordance with SCTE/ANSI standards (where applicable), using standard frequency assignments.

Model GS7000 Node with 40/52 MHz Split

Scientific Atlanta
A CISCO COMPANY

RF Section Specifications

General Station Performance	Units	Forward	Reverse	Notes
Pass Band	MHz	52-1002	5-40	
Input/Output Port Return Loss	dB	17	16	
Hum Modulation @ 12 A	dB	70 (52-870 MHz) 60 (871-1002 MHz)	60 (5-10 MHz) 70 (11-40 MHz)	
Hum Modulation @ 15 A	dB	65 (52-870 MHz) 60 (871-1002 MHz)	60 (5-10 MHz) 65 (11-40 MHz)	
Test Points (±0.5 dB)	dB	-20	-20	

Forward Station Performance		Units	7.5 dB I/S EQ w/3 dB I/S Pad	Notes
Amplifier Type		-	GaAs FET	
Operational Gain (minimum)		dB	32	1
Frequency Response		dB	± 0.5	
Internal Tilt (±1 dB)		dB	14.5	2,4
Port to Port Isolation		dB	65 (52-750 MHz) 55 (751-1002 MHz)	
Noise Figure @…	54 MHz 1002 MHz	dB	14.0 12.0	3
Reference Output Levels @…	1002 MHz 870 MHz 750 MHz 650 MHz 550 MHz 55 MHz	dBmV	49.5 47.5 45.7 44.0 42.5 35.0	
Reference Output Tilt (55-1002 MHz)		dB	14.5	2,5
78 NTSC channels (CW) with digital				8
Composite Triple Beat		dB	78	6
Cross Modulation		dB	68	6,10
Composite Second Order (high side)		dB	70	6
94 NTSC channels (CW) with digital				11
Composite Triple Beat		dB	73	6
Cross Modulation		dB	65	6,10
Composite Second Order (high side)		dB	67	6

Reverse Station Performance	Units	Reverse	Notes
Amplifier Type	-	GaAs FET	
Operational Gain (minimum)	dB	-2	7
Frequency Response	dB	± 0.5	
Internal Tilt (+/- 1 dB)	dB	0	
Path to Path Isolation	dB	55	
Noise Figure	dB	13.5	9

Station Delay Characteristics	40 / 52 Split		
Forward (Chrominance to Luminance Delay)		**Reverse** (Group Delay in 1.5 MHz BW)	
Frequency (MHz)	**Delay (nS)**	**Frequency (MHz)**	**Delay (nS)**
55.25 - 58.83	16	5.0 - 6.5	35
61.25 - 64.83	8	6.5 - 8.0	15
67.25 - 70.83	5	8.0 - 9.5	7
		35.5 - 37.0	11
		37.0 - 38.5	14
		38.5 - 40.0	20

Unless otherwise noted, specifications reflect typical performance and are referenced to 68°F (20°C). Specifications are based upon measurements made in accordance with SCTE/ANSI standards (where applicable), using standard frequency assignments.

Scientific Atlanta
A CISCO COMPANY

RF Section Specifications, continued

Notes for RF Section Specifications:

1. Forward operational gain is for station from output of optical Rx to node RF output port, with 0 dB pad in optical interface board (OIB), any forward configuration module, 3 dB interstage (I/S) pad, 7.5 dB linear I/S EQ, factory select output pad. Includes OIB losses.
2. Reference output tilt and internal tilt are both “Linear” tilt.
3. Forward noise figure at input of OIB (Rx output), with 0 dB OIB pad, any forward configuration module, 3 dB I/S pad, 7.5 dB linear I/S EQ, factory select output pad.
4. Forward internal tilt specified is primarily due to an on-board fixed equalizer and a factory configured 7.5 dB linear I/S EQ
5. The forward reference output tilt specified is achieved via field installation of appropriate linear I/S EQ, in conjunction with the internal tilt of the launch amplifier and the tilt associated with the optical link (transmitter/receiver combination).
6. Stated distortion performance is for launch amplifier section operated at reference output levels and tilts. Full station performance can be determined by combining optic performance and launch amplifier performance.
7. Reverse operational gain from the node’s input port(s) to reverse transmitter input, with 0 dB reverse input pad, any reverse configuration module, 0 dB OIB pad. Includes OIB losses.
8. “Digital” refers to 550 - 1002 MHz loading with QAM carriers at -6 dB relative to analog video carrier levels.
9. Reverse noise figure at reverse input port, with 0 dB reverse input pad, any reverse configuration module, 0 dB OIB pad.
10. X-mod (@ 15.75 kHz) specified using 100% synchronous modulation and frequency selective measurement device.
11. “Digital” refers to 650 - 1002 MHz loading with QAM carriers at -6 dB relative to analog video carrier levels.

Unless otherwise noted, specifications reflect typical performance and are referenced to 68°F (20°C). Specifications are based upon measurements made in accordance with SCTE/ANSI standards (where applicable), using standard frequency assignments.

Model GS7000 Node with 40/52 MHz Split

Scientific Atlanta
A CISCO COMPANY

Specifications, continued

Electrical	Units					Notes
Max. AC Through Current (continuous)	Amps	15				
Max. AC Through Current (surge)	Amps	25				
Component DC Power Consumption (typical)		**@+24 VDC**	**@ +8 VDC**	**@ +5 VDC**	**@ -6 VDC**	
Launch Amplifier (includes reverse amp)	Amps	2.7	-	0.5	-	
Status Monitoring Transponder	Amps	0.01	-	0.2	-	
GS7000 Low Current Optical Receiver	Amps	0.12	-	-	-	
Reverse Transmitter – High Gain FP	Amps	0.09	-	-	0.07	
Reverse Transmitter – High Gain DFB	Amps	0.09	-	-	0.09	
Power Supply DC Current Rating	Amps	6.20	0.90	1.30	0.80	

Station Powering Data												
GS7000 Node	I DC (Amps at 24 VDC)		**AC Voltage**									
			90	**85**	**80**	**75**	**70**	**65**	**60**	**55**	**50**	**45**
with: 1 forward Rx, 1x2 forward config module,1 reverse Tx, 4x1 reverse config module	2.93	AC Current (A)	1.3	1.4	1.4	1.4	1.5	1.5	1.6	1.8	1.9	2.2
		Power (W)	94.0	93.9	93.6	93.5	93.4	93.4	93.3	93.4	93.5	94.0
with: 2 forward Rx's, 2x2 forward config module,4 reverse Tx's, 4x4 reverse config module	3.30	AC Current (A)	1.5	1.5	1.5	1.6	1.7	1.8	1.9	2.0	2.3	2.5
		Power (W)	108.4	108.1	108.0	107.7	107.6	107.6	107.6	107.6	107.8	108.7

Data is based on stations configured with status monitoring transponder. AC currents specified are based on measurements made with typical CATV type ferro-resonant AC power supply (quasi-square wave).

DC supply has a fixed under-voltage lockout of 33 V AC.

Environmental	Units	
Operating Temperature Range	degrees	-40°F to 140°F (-40°C to 60°C)
Relative Humidity Range	percent	5% to 95%
Mechanical		
Housing Dimensions	**Weight**	
21.3 in. L x 11.6 in. H x 11.1 in. D (541 mm x 295 mm x 282 mm)	Station with 4 RX, 4 TX, 2 power supplies: 50.0 lbs. (22.7 Kg)	

Unless otherwise noted, specifications reflect typical performance and are referenced to 68°F (20°C). Specifications are based upon measurements made in accordance with SCTE/ANSI standards (where applicable), using standard frequency assignments.

Scientific Atlanta
A CISCO COMPANY

Ordering Information

The GS7000 Node is available in a wide variety of configurations. The GS7000 Ordering Matrix provides ordering information for configured node stations. This page contains ordering information for required and optional accessories. Please consult with your Account Representative, Customer Service Representative, or Applications Engineer to determine the best configuration for your particular application.

Required Accessories	Part Number
Plug-in Pads (attenuators) – Available in 0.5 dB steps from 0 to 20 dB (for Optical Interface Board) • 1 required for each Optical Receiver Module installed in the node • 1 required for each Optical Transmitter Module installed in the node	589693 (0 dB) sequentially thru 589734 (20.5dB)

Optional Accessories	Part Number
Plug-in Forward Linear Equalizers – Available in 1.5 dB steps from 0 to 15 dB 40 MHz. • Node is shipped with a 7.5 dB Linear Equalizers (2)* installed for 14.5dB of tilt to 1002 MHz (*4008782)	4007228 (0 dB) 4008778 (1.5 dB) sequentially thru 4008787 (15.0 dB)
Plug-in Signal Directors – 2 required • Node is shipped with Jumpers installed to activate 4 RF output ports • Optional 2-Way Splitters are required to activate 5 or 6 RF output ports	 4011907 4011908

Note: Configured nodes ship without reverse input pads and any of the pads on the OIB. All other standard accessories are shipped from the factory. Launch Amp attenuator pads, 2 X 7.5dB linear EQs and 2 signal director jumpers are shipped with every configured node.

GS7000 Forward Launch Amplifiers	Part Number
Node Launch Amplifier, 2-way forward segmentation, 40/52 MHz split	4011887
GS7000 Forward Configuration Modules	
Forward Configuration Module, 1x2	4011900
Forward Configuration Module, 1x2 Redundant	4011901
Forward Configuration Module, 2x2	4011902
Forward Configuration Module, 2x2 Redundant	4011903
Forward Linear Equalizers	
0 dB 1GHz Forward Linear EQ	4007228
1.5 dB 1GHz Forward Linear EQ	4008778
3.0 dB 1GHz Forward Linear EQ	4008779
4.5 dB 1GHz Forward Linear EQ	4008780
6.0 dB 1GHz Forward Linear EQ	4008781
7.5 dB 1GHz Forward Linear EQ	4008782
9.0 dB 1GHz Forward Linear EQ	4008783
10.5 dB 1GHz Forward Linear EQ	4008784
12.0 dB 1GHz Forward Linear EQ	4008785
13.5 dB 1GHz Forward Linear EQ	4008786
15.0 dB 1GHz Forward Linear EQ	4008787
GS7000 Forward Low Current Optical Receivers	
Optical Receiver, SCA connector	4013593
Optical Receiver, SCU connector	4013594
Optical Receiver, FCA connector	4013595
GS 7000 Reverse Amplifiers	
Reverse Amplifier, 5-40 MHZ	4011912
GS7000 Reverse Configuration Modules	
Reverse Configuration Module, 4x1	4011918
Reverse Configuration Module, 4x1 Redundant	4011919
Reverse Configuration Module, 4x2 *(for use with 6-position OIB)*	4011920
Reverse Configuration Module, 4x2 *(for use with 8-position OIB)*	4014300
Reverse Configuration Module, 4x2 Redundant	4011921
Reverse Configuration Module, 4x4	4011922

Scientific Atlanta
A CISCO COMPANY

Ordering Information, continued

GS7000 1310 nm Reverse Optical Transmitters	
3 dBm, DFB, High Gain, Analog, SC/APC	4011952
3 dBm, DFB, High Gain, Analog, SC/UPC	4011953
3 dBm, DFB, High Gain, Analog, FC/APC	4011954
2 dBm, FP, High Gain, Analog, SC/APC	4011958
2 dBm, FP, High Gain, Analog, SC/UPC	4011959
2 dBm, FP, High Gain, Analog, FC/APC	4011960
GS7000 CWDM Reverse Optical Transmitters	
3 dBm, CWDM High Gain, 1470 nm, Analog, SC/APC	4011955
3 dBm, CWDM High Gain, 1490 nm, Analog, SC/APC	4011956
3 dBm, CWDM High Gain, 1510 nm, Analog, SC/APC	4011957
3 dBm, CWDM High Gain, 1530 nm, Analog, SC/APC	4011961
3 dBm, CWDM High Gain, 1550 nm, Analog, SC/APC	4011965
3 dBm, CWDM High Gain, 1570 nm, Analog, SC/APC	4011966
3 dBm, CWDM High Gain, 1590 nm, Analog, SC/APC	4011967
3 dBm, CWDM High Gain, 1610 nm, Analog, SC/APC	4011968
3 dBm, CWDM High Gain, 1470 nm, Analog, SC/UPC	4011969
3 dBm, CWDM High Gain, 1490 nm, Analog, SC/UPC	4011970
3 dBm, CWDM High Gain, 1510 nm, Analog, SC/UPC	4011974
3 dBm, CWDM High Gain, 1530 nm, Analog, SC/UPC	4011975
3 dBm, CWDM High Gain, 1550 nm, Analog, SC/UPC	4011976
3 dBm, CWDM High Gain, 1570 nm, Analog, SC/UPC	4011977
3 dBm, CWDM High Gain, 1590 nm, Analog, SC/UPC	4013218
3 dBm, CWDM High Gain, 1610 nm, Analog, SC/UPC	4013299
3 dBm, CWDM High Gain, 1470 nm, Analog, FC/APC	4013542
3 dBm, CWDM High Gain, 1490 nm, Analog, FC/APC	4013543
3 dBm, CWDM High Gain, 1510 nm, Analog, FC/APC	4013544
3 dBm, CWDM High Gain, 1530 nm, Analog, FC/APC	4013545
3 dBm, CWDM High Gain, 1550 nm, Analog, FC/APC	4013546
3 dBm, CWDM High Gain, 1570 nm, Analog, FC/APC	4013547
3 dBm, CWDM High Gain, 1590 nm, Analog, FC/APC	4013548
3 dBm, CWDM High Gain, 1610 nm, Analog, FC/APC	4013549
bdr Digital Laser Modules	
0 dBm. Digital Laser Module, 1310 nm, DFB, SC/APC	4011905
0 dBm, Digital Laser Module, 1310 nm, DFB, SC/UPC	4011906
0 dBm, Digital Laser Module, 1310 nm, DFB, FC/APC	4011909
0 dBm, Digital Laser Module, 1550 nm, DFB, SC/APC	4011971
0 dBm, Digital Laser Module, 1550 nm, DFB, SC/UPC	4011972
0 dBm, Digital Laser Module, 1550 nm, DFB, FC/APC	4011973
bdr Digital Processor Modules	
bdr 4:1 Digital Processor Module for GS7000 Node (5-40 MHz)	4013562
bdr 2:1 Digital Processor Module for GS7000 Node (5-42 MHz)	4013561
bdr 4:1 Digital Processor Module for GS7000 Node (7-42 MHz)	4013563
bdr 2:1 Digital Processor Module High Gain for GS7000 Node (5-42 MHz)	4013564

Ordering Information, continued

ITU Grid Reverse Optical Transmitters	
7 dBm, ITU Grid, CH. 13, 1567.13 nm, Digital, SC/APC	4013560.13
7 dBm, ITU Grid, CH. 15, 1565.50 nm, Digital, SC/APC	4013560.15
7 dBm, ITU Grid, CH. 17, 1563.86 nm, Digital, SC/APC	4013560.17
7 dBm, ITU Grid, CH. 19, 1562.23 nm, Digital, SC/APC	4013560.19
7 dBm, ITU Grid, CH. 21, 1560.61 nm, Digital, SC/APC	4013560.21
7 dBm, ITU Grid, CH. 23, 1558.98 nm, Digital, SC/APC	4013560.23
7 dBm, ITU Grid, CH. 25, 1557.36 nm, Digital, SC/APC	4013560.25
7 dBm, ITU Grid, CH. 27, 1555.75 nm, Digital, SC/APC	4013560.27
7 dBm, ITU Grid, CH. 29, 1554.13 nm, Digital, SC/APC	4013560.29
7 dBm, ITU Grid, CH. 31, 1552.52 nm, Digital, SC/APC	4013560.31
7 dBm, ITU Grid, CH. 33, 1550.92 nm, Digital, SC/APC	4013560.33
7 dBm, ITU Grid, CH. 35, 1549.32 nm, Digital, SC/APC	4013560.35
7 dBm, ITU Grid, CH. 37, 1547.72 nm, Digital, SC/APC	4013560.37
7 dBm, ITU Grid, CH. 39, 1546.12 nm, Digital, SC/APC	4013560.39
7 dBm, ITU Grid, CH. 41, 1544.53 nm, Digital, SC/APC	4013560.41
7 dBm, ITU Grid, CH. 43, 1542.94 nm, Digital, SC/APC	4013560.43
7 dBm, ITU Grid, CH. 45, 1541.35 nm, Digital, SC/APC	4013560.45
7 dBm, ITU Grid, CH. 47, 1539.77 nm, Digital, SC/APC	4013560.47
7 dBm, ITU Grid, CH. 49, 1538.19 nm, Digital, SC/APC	4013560.49
7 dBm, ITU Grid, CH. 51, 1536.61 nm, Digital, SC/APC	4013560.51
7 dBm, ITU Grid, CH. 53, 1535.04 nm, Digital, SC/APC	4013560.53
7 dBm, ITU Grid, CH. 55, 1533.47 nm, Digital, SC/APC	4013560.55
7 dBm, ITU Grid, CH. 57, 1531.90 nm, Digital, SC/APC	4013560.57
7 dBm, ITU Grid, CH. 59, 1530.33 nm, Digital, SC/APC	4013560.59
Optical Interface Board	
8-position, Optical Interface Board, 4Rx / 4Tx	4011927
6-position, Optical Interface Board, 4Rx / 2Tx / bdr	4011928
Power Supply	
Node Power Supply	4011930
Local Control Modules & Status Monitoring Module	
Local Control Module, with craft port	4011932
Local Control Module, with ***status monitor*** & craft port	4011931
Test Point Cable Kit	
Test Point Cable Kit, *(includes the 6 cables required to enable GS7000 housing external test points)*	4013568

Scientific-Atlanta, Inc.
1-800-722-2009 or 770-236-6900
www.scientificatlanta.com

Part Number 7008432 Rev C
November 2006